# CIRCUIT DIAGRAM

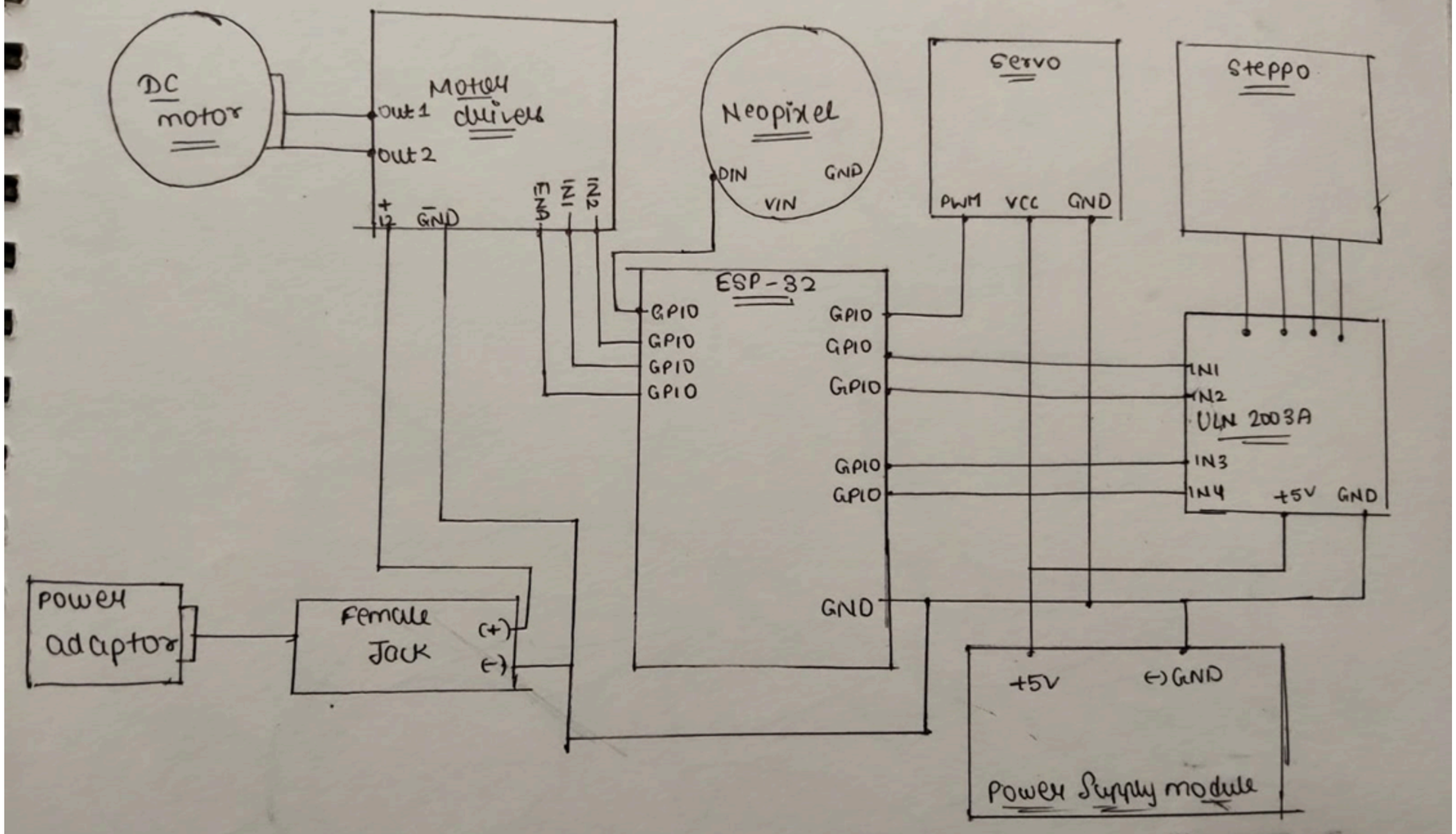

**Electronic Details Document-**

The system uses an ESP32 to control all components. A DC motor runs the conveyor belt and its speed is controlled using PWM. The motor direction is fixed using two control pins.

An IR sensor is used to detect when the user stops the tray. It works on active-low logic, so it gives a low signal when touched. This is used to stop the belt.

A servo motor is used as the dispenser. It opens and closes when a push button is pressed. The button uses a pull-up connection, so it detects a press when the value goes low.

A stepper motor is used for rotation. It moves step by step using signals sent in a sequence to four pins.

NeoPixel LEDs are used for visual output. Different colors show different states like running, stopped, and dispensing.

All components share a common ground, and motors use external power for proper working.